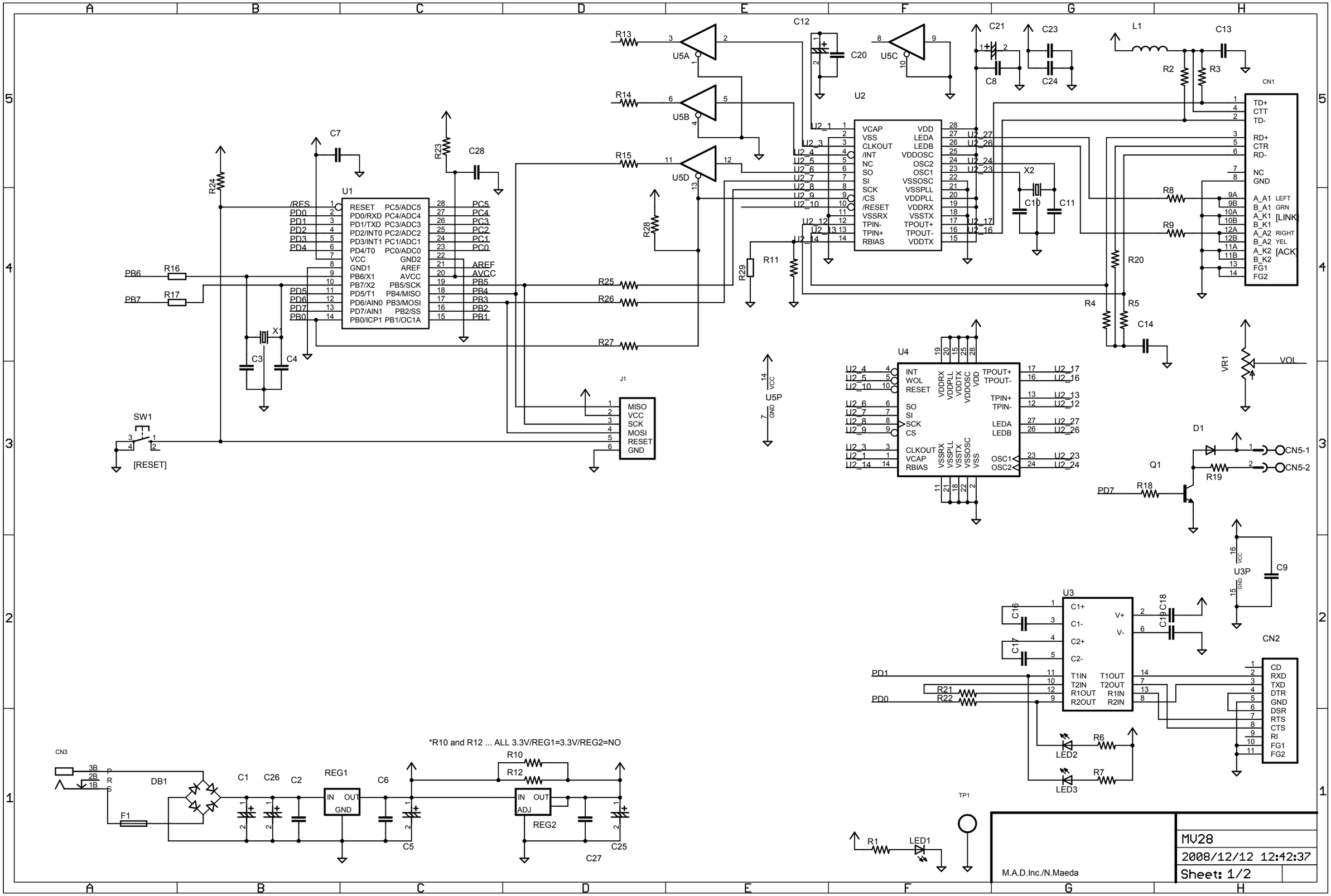

2008/12/14 11:19:31 C:\Program Files\EAGLE-4.16r2\projects\MV28\MV28.sch (Sheet: 1/2)

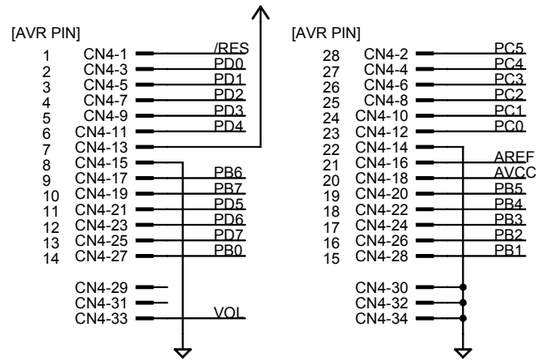

M.A.D.Inc./N.Maeda

MV28

2008/12/12 12:42:37

Sheet: 2/2